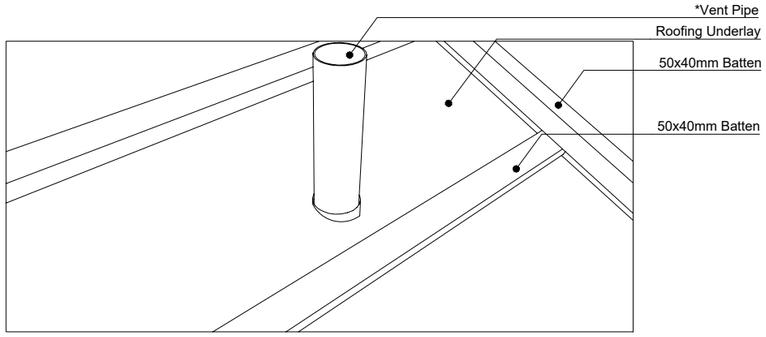

Set - Up : Prepare Components

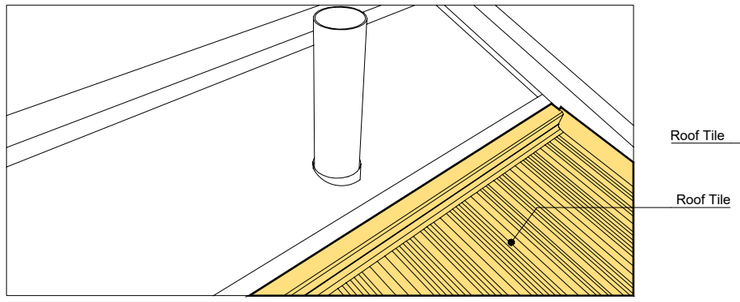

Build-Up 1: Install the Roof Tiles - lower course.

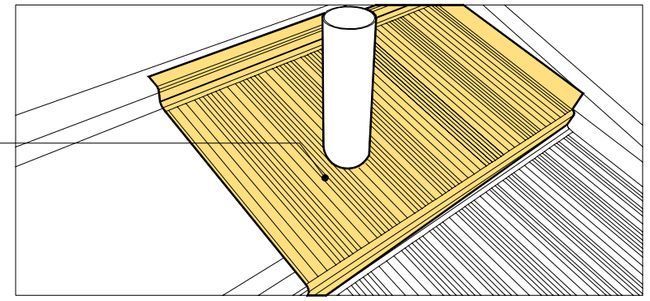

Build-Up 2: Install the Roof Tiles - Cut opening for Vent Pipe.
(Allowing sufficient clearance around the pipe).

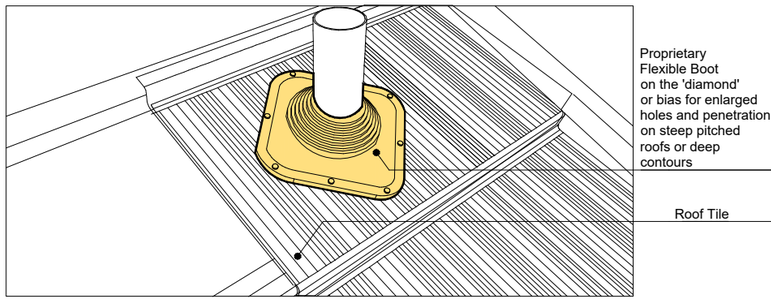

Build-Up 3: Install the proprietary Flexible Boot Flashing
(Refer to Manufaturer's / Specialist's Installation Manual)

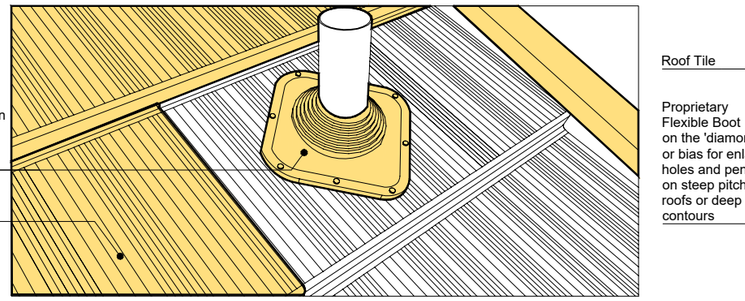

Build-Up 4: Install the Roof Tiles - Subsequent courses.

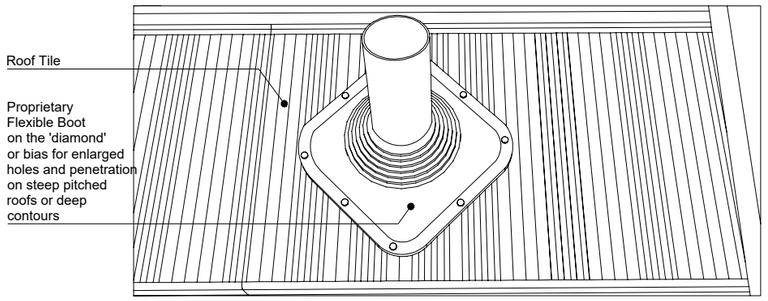

Complete Set-up

NOTE: SEALANTS MUST ALWAYS BE APPLIED ON TAGS AND BETWEEN THE TWO SURFACES TO BE LAPPED. AFTER THAT ALL THE ACCESSORY JOINTS MUST BE RIVETED TOGETHER. THE EXCESS SEALANT EXTRUDED FROM THE LAP MUST BE REMOVED.

* Not Part of Roofer's Installation Scope

GENERAL NOTES:

MATERIALS AND COMPONENTS SUCH AS WATER PROOFING MEMBRANES, WALL CLADDING, FLASHINGS, AND OTHER RELATED ITEMS SHOWN IN THE ROOFING DETAILS THAT ARE OUTSIDE GERARD ROOF'S SCOPE ARE PROVIDED FOR PRESENTATION AND COORDINATION PURPOSES ONLY. ALL DIMENSIONS, PROFILES, FIXING METHODS, AND INSTALLATION REQUIREMENTS FOR THESE MATERIALS SHALL BE CONFIRMED AND PROVIDED BY THE RESPECTIVE SUPPLIER OR SPECIALIST CONTRACTOR OF EACH SYSTEM.

GERARD ROOF'S RESPONSIBILITY IS LIMITED TO THE ROOFING SYSTEM AND ITS ASSOCIATED COMPONENTS AS DEFINED IN THE APPROVED SCOPE OF WORKS. THE COMPANY SHALL NOT BE HELD LIABLE FOR ANY DISCREPANCIES, OMISSIONS, OR PERFORMANCE ISSUES ARISING FROM MATERIALS OR SYSTEMS BEYOND ITS CONTRACTUAL SCOPE. DESIGNER SHOULD CONSULT BOTH THE MRM CODE OF PRACTICE / ACCEPTABLE SOLUTION E2/AS1 AND ALL RELEVANT BUILDING CODES.

GERARD
Roofing Designed to Endure

GERARD ROOF TILES

PENETRATION DETAIL - FLEXIBLE BOOT FLASHING ON BATTENS

© 2020 Terms Of Use Disclaimer: This information is intended solely as a guide for the use of Gerard Roofs products. Before using you should ensure that the product is suitable for use in the specific application. Nothing in this information constitutes a statement of fitness for particular purpose and appropriate expert advice is to always be obtained. Gerard Roofs makes no warranty regarding the use of this information with non - Gerard Roofs products. This drawing is the property of Gerard Roofs. It cannot be copied in any form and must be returned to Gerard Roofs upon request. All Details are to be used for indicative purposes only.

All dimenions in millimeters.

Date:	AUG 2026
Version:	00
Scale:	N.T.S.
Code:	SFSKB_311P1_ID_R00_01_2026

NZ: gerardroofs.co.nz
customerservice@gerardroofs.co.nz
AUS: gerardroofs.com.au
info@gerardroofs.com.au